Installation and Operation Manual

Model RBS-24ED

How to maintain and operate your Demand Controlled Water Softener

(7/26/02)

Table of Contents

Unpacking and Inspection

The parts required to assemble and install the unit are included in a parts bag.

Thoroughly check the unit for possible shipping damage and parts loss. Also inspect and note any damage to the shipping carton.

Remove and discard (RECYCLE) all packing materials. To avoid loss of small parts, we suggest you keep the small parts in the parts bag until you are ready to use them.

FOR FUTURE REFERENCE, ENTER THE FOLLOWING INFORMATION

MODEL NO. ❶ ❷ _____ SERIAL NO. ❶ ❷ _____

CODE ❶ _____ INSTALLATION DATE _____

WATER HARDNESS _____ GPG IRON CONTENT _____ PPM

❶ on registration decal ❷ on shipping carton

Dimensions/Specifications

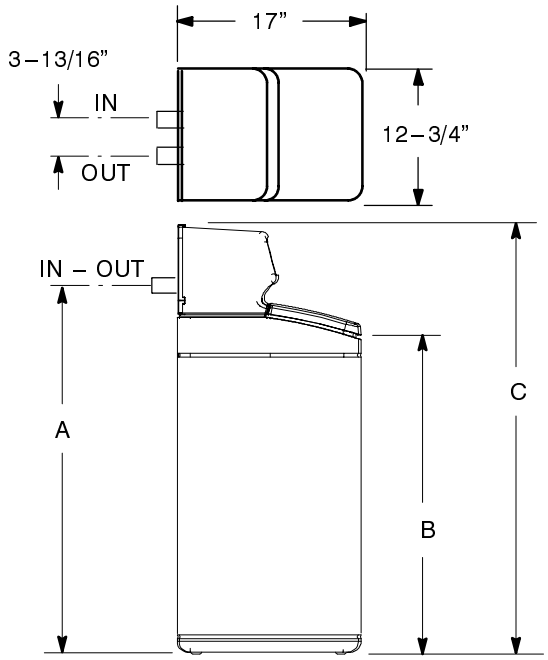

MODEL	NOMINAL RESIN TANK SIZE	A	B	C
RBS–24ED	8” DIA. X 40”	44–1/2”	37–1/2”	47”

Wiring Schematic

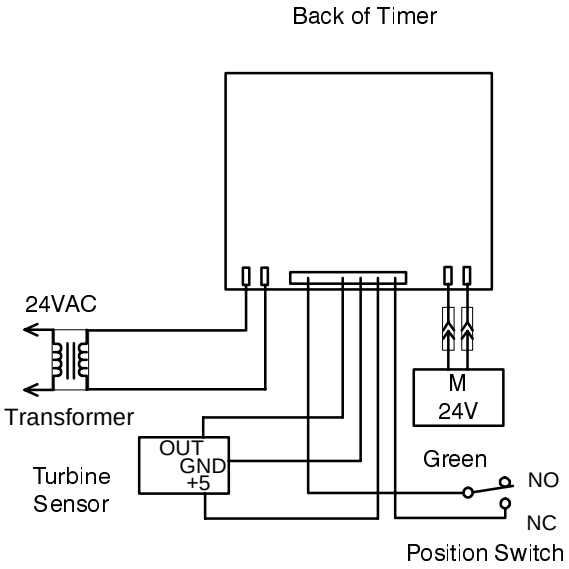

Miscellaneous Service Information

MODEL CODE		RBS–24ED
LBS / CU FT RESIN ❻		42.5 / .80
FILL CYCLE	❶ TIME	2 – 10
	❷ FLOW	.3 gpm (1.1 liters)
BRINE CYCLE	❸ TIME	106 – 110
	❹ FLOW	.16 gpm (.61 liters)
BRINE RINSE CYCLE	❹ FLOW	.12 gpm (.45 liters)
BACKWASH CYCLE	❺ TIME	7 minutes
	❹ FLOW	1.8 gpm (.68 liters)
FAST RINSE CYCLE	❺ TIME	3 minutes
	❹ FLOW	1.8 gpm (.68 liters)

❶ minutes, varies with capacity operating level

❷ gallon per minute flow to brine tank

❸ includes brine rinse cycle minutes

❹ gallon per minute flow to drain

❺ factory set default minutes

❻ synthetic high capacity resin

Salt Storage Capacities

RBS-24ED - 175 lbs.

	RBS-24ED
Rated Softening Capacity (Grains/Pounds of Salt)	30,100 @ 12.8
Rated Softeners Efficiency	5080 gr. / lb.
Rated Service Flow Rate (gpm)	8.0
Amount of High Capacity Resin (cu ft)	.80
Pressure Drop at Rated Service Flow (psig)	14
Water Supply Max. Hardness (gpg)	95
Water Supply Max. Clear Water Iron (ppm)	5
Water Pressure Limits (min./max. psi)	20 – 125
Min. – Max. Water Temperature (˚F)	40 – 120
Min. Water Supply Flow Rate (gpm)	3
Max. Drain Flow Rate (gpm)	1.8

These systems conform to NSF 44 for the specific performance claims as verified and substantiated by test data.

Safety Guides

Follow the installation instructions carefully. **(Failure to install the unit properly voids the warranty.)**

Before you begin installation, read this entire manual. Then, obtain all the materials and tools you will need to make the installation.

Check local plumbing and electrical codes. The installation must conform to them.

Use only lead-free solder and flux for all sweat-solder connections, as required by local codes.

Use care when handling the unit. Do not turn upside down, drop, or set on sharp protrusions.

Do not locate the unit where freezing temperatures occur. Do not attempt to treat water over 120°F. **Freezing, or hot water damage voids the warranty.**

Avoid installing in direct sunlight. Excessive sun heat may cause distortion or other damage to non-metallic parts.

The unit requires a minimum water flow of 3 gallons per minute at the inlet. **Maximum allowable inlet water pressure is 125 psi.** If daytime pressure is over 80 psi, nighttime pressure may exceed the maximum. Use a pressure reducing valve if necessary. (Adding a pressure reducing valve may reduce the flow.)

The unit works on 24 volt-60 hz electrical power only. Be sure to use the included transformer.

This system is not intended to be used for treating water that is microbiologically unsafe or of unknown quality without adequate disinfection before or after the system.

Water Conditioning Information

Water Conditioning

Water conditioning is the treatment of four general conditions. These are:

1. HARDNESS
2. IRON
3. ACIDITY
4. SEDIMENTS

1. ***HARDNESS*** is a term to describe the presence of calcium and magnesium minerals in water. A chemical analysis accurately measures the amount of minerals in grain weight. For example, one gallon of water with 5 grains per gallon (gpg) hardness has dissolved minerals, that if solidified, about equals the size of one ordinary aspirin tablet. One gallon of water, 25 gpg hard, has a mineral content equal in size to 5 aspirin tablets. Water hardness varies greatly across the country. It generally contains from 3 to 100 gpg.

   Hard water affects living in general. Hardness minerals combine with soap to make a soap curd. The curd greatly reduces the cleaning action of soap. Precipitated hardness minerals form a crust on cooking utensils, appliances, and plumbing fixtures. Even the tastes of foods are affected. A water softener removes the hardness minerals to eliminate these problems, and others.

   Sodium Information: Water softeners using sodium chloride (salt) for regeneration add sodium to the water. Persons on sodium restricted diets should consider the added sodium as part of their overall intake.

2. ***IRON*** in water is measured in parts per million (ppm). The total* ppm of iron, and type or types*, is determined by chemical analysis. Four different types of iron in water are:

   ❶ Ferrous (clear water),

   ❷ Ferric (red water),

   ❸ Bacterial and organically bound iron,

   ❹ Colloidal and inorganically bound iron (ferrous or ferric).

   *Water may contain one or more of the four types of iron and any combination of these. Total iron is the sum of the contents.

   ❶ Ferrous (clear water) iron is soluble and dissolves in water. It is usually detected by taking a sample of water in a clear bottle or glass. Immediately after taking, the sample is clear. As the water sample stands, it gradually clouds and turns slightly yellow or brown as air oxidizes the iron. This usually occurs in 15 to 30 minutes. **This unit will remove moderate amounts of this type of iron (see specifications).**

   When using the softener to remove Ferrous (clear water) iron, add 5 grains to the hardness setting for every 1 ppm of Ferrous (clear water) iron.

   ❷ Ferric (red water), and ❸ Bacterial and organically bound irons are insoluble. This iron is visible immediately when drawn from a faucet because it has oxidized before reaching the home. It appears as small cloudy yellow, orange, or reddish suspended particles. After the water stands for a period of time, the particles settle to the bottom of the container. Generally these irons are removed from water by filtration. Chlorination is also recommended for bacterial iron. **This unit will not remove ferric or bacterial iron.**

   ❹ Colloidal and inorganically bound iron is of ferric or ferrous form that will not filter or exchange out of water. In some instances, treatment may improve colloidal iron water, but always CONSULT A QUALIFIED WATER CHEMISTRY LAB before attempting to treat it. Colloidal iron water usually has a yellow appearance when drawn. After standing for several hours, the color persists and the iron does not settle, but remains suspended in the water.

   Iron in water causes stains on clothing and plumbing fixtures. It negatively affects the taste of food, drinking water, and other beverages. **This unit will not remove colloidal iron.**

3. ***ACIDITY*** or acid water is caused by carbon dioxide, hydrogen sulfide, and sometimes industrial wastes. It is corrosive to plumbing, plumbing fixtures, water heaters, and other water using appliances. In can also damage and cause premature failure of seals, diaphragms, etc., in water handling equipment.

   A chemical analysis is needed to measure the degree of acidity in water. This is called the pH of water. Water testing below 6.9 pH is acidic. The lower the pH reading, the greater the acidity. A neutralizer filter or a chemical feed pump are usually recommended to treat acid water.

4. ***SEDIMENT*** is fine, foreign material particles suspended in water. This material is most often clay or silt. Extreme amounts of sediment may give the water a cloudy appearance. **A sediment filter installed ahead of the water softener normally corrects this situation.**

Assembly

1. Water softeners are factory assembled. During installation, remove the Salt Hole Cover. Set aside to prevent damage. Check the brinewell to be sure it is secured and vertical (see Figure 1). Slide Faceplate Cover forward to expose back valve assembly.
2. Lift the brine valve out of the brinewell. Be sure the float stem is parallel to stand tube so seals will seat properly during operation. Replace the brine valve in the brinewell bottom and install the Brinewell Cover.
3. Install the brine tank overflow grommet and elbow in the 13/16” diameter hole in the back of the salt storage tank sidewall.

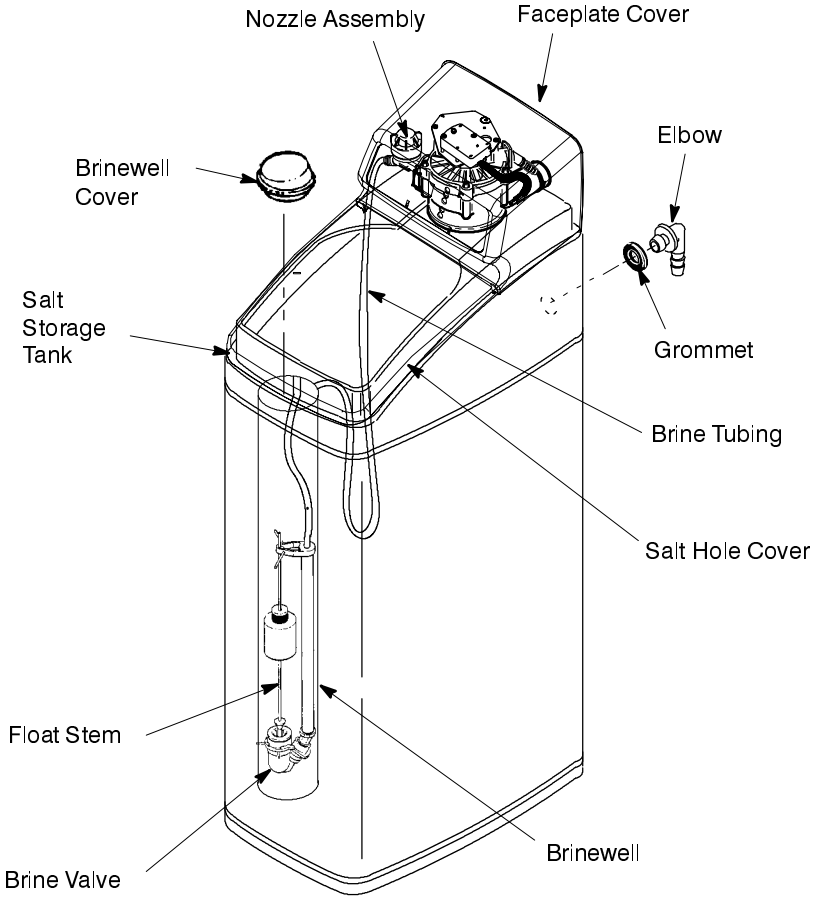

Figure 1

Planning Installation

Inlet – Outlet Plumbing Options

- **ALWAYS INSTALL** either a single bypass valve (not included) or a 3 valve bypass system (not included). Bypass valves allow you to turn off water to the softener for repairs if needed, but still have water in house pipes.
- Use 3/4” (minimum) pipe and fittings.
- Use sweat copper... or, threaded pipe... or, PVC plastic pipe... or, other approved plumbing.

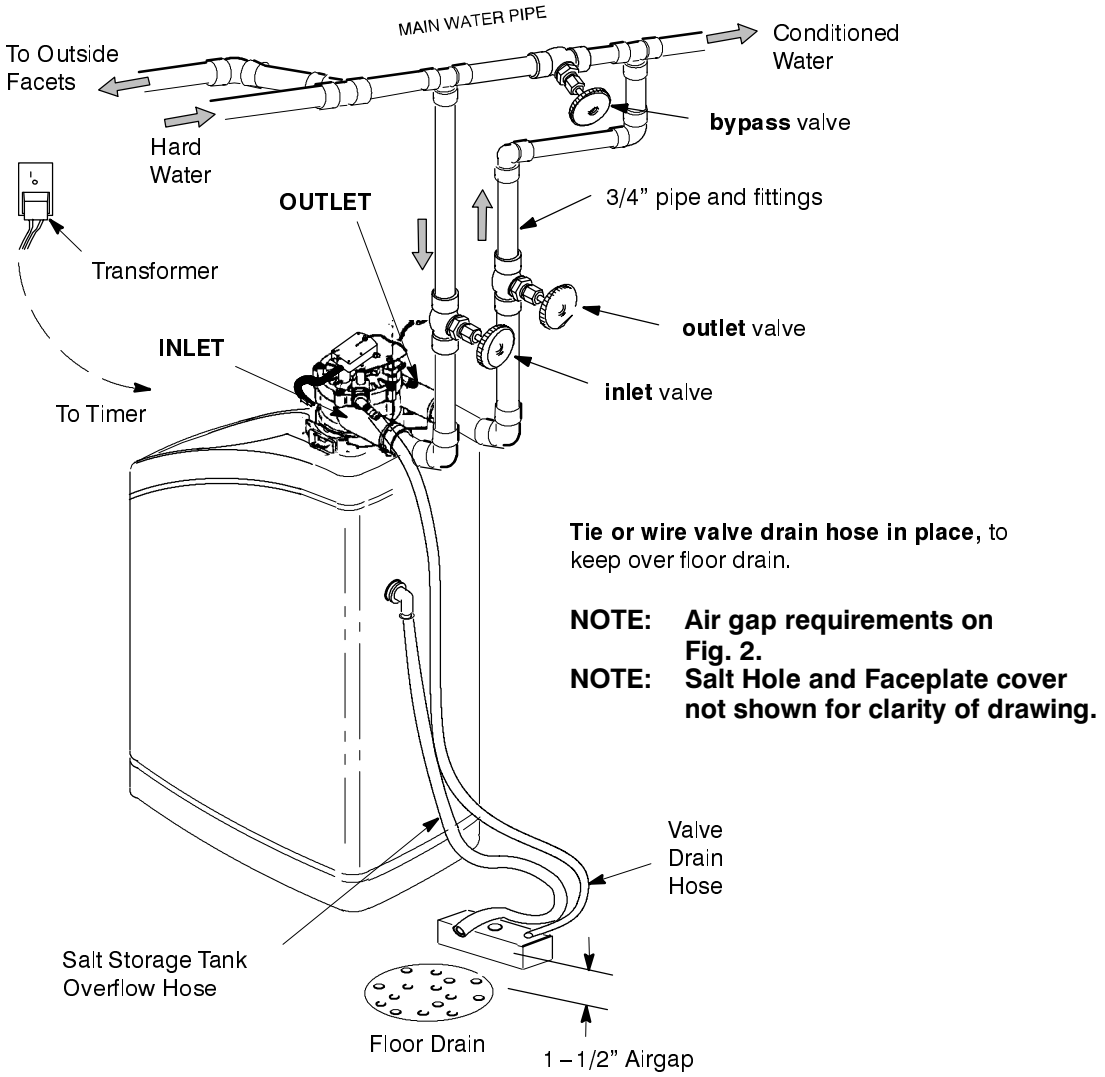

Figure 2

Other Requirements

- A 120V-60Hz, grounded electrical outlet (continuously "live") is needed within 10' of the unit.
- A drain is needed for regeneration discharge water. A floor drain, close to the unit, is preferred. A laundry tub, standpipe, etc., are other drain options.

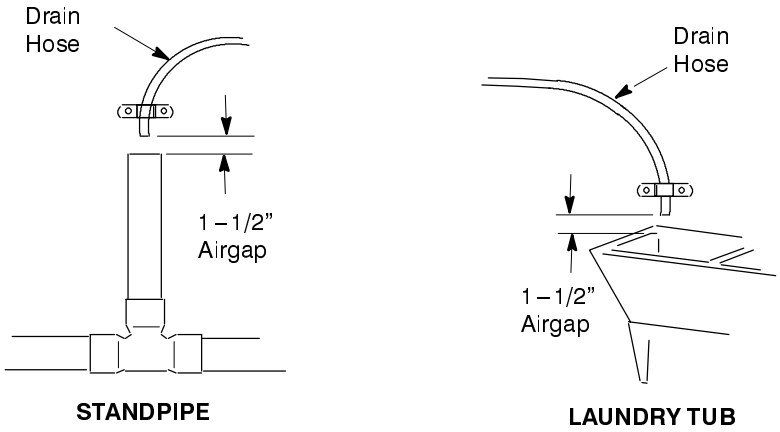

Figure 3

Tools and Materials You May Need

- Common Screwdriver
- Pliers
- Tape Measure
- Pipe and fittings as required

Soldered Copper

- Tubing cutter
- Propane torch
- Misc. fittings
- LEAD-FREE solder and flux
- Emery cloth, sandpaper or steel wool

Threaded

- Pipe cutter or hacksaw
- Threading tool
- Pipe joint compound*
- Misc. fittings

CPVC Plastic

- Pipe cutter
- Hacksaw
- Adjustable wrench
- Solvent cement*
- Primer
- Misc. fittings

NOTE: The salt storage tank drain elbow accepts either 1/2" or 3/8" I. D. hose.

***VALVE DRAIN OPTIONS:** Flexible drain hose is not allowed in all localities (check your plumbing codes). For a rigid valve drain run, cut the barbed section off the drain fitting for access to the 1/4” pipe threads. Then plumb a rigid drain as needed (see Figure 4).

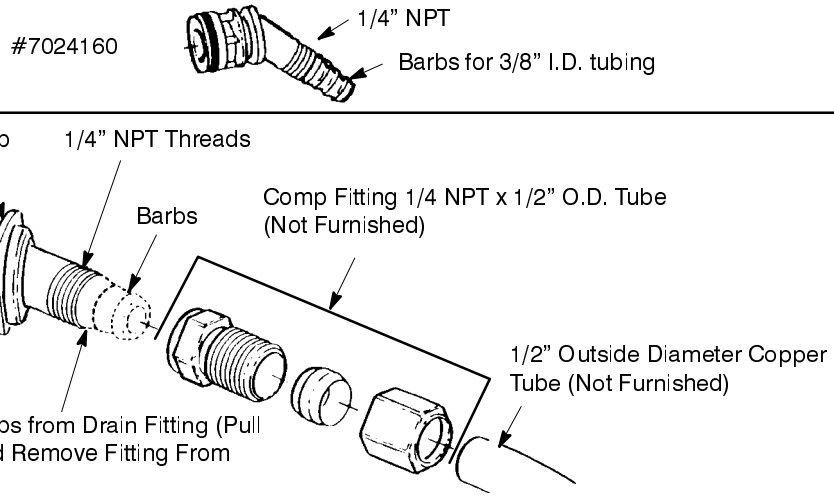

Figure 4

Select Installation Location

Consider all of the following when selecting an installation location for the unit.

- To condition all water in the home, install the unit close to the water supply inlet, and before all other plumbing connections, EXCEPT outside water pipes. Outside faucets should remain on hard water to avoid wasting conditioned water and salt.
- A nearby drain is needed to carry away regeneration discharge water. Use a floor drain, laundry tub, sump, standpipe, etc., or other options (check your local codes).
- **The unit works on 24 volts only**. A transformer is included to reduce 120-60 Hz household electrical power. Provide an approved, grounded outlet within 10’ of the unit. The unit includes a 10’ power cable for connection between the transformer and the timer.
- **Always install the unit BEFORE the water heater** and after all other installed water conditioning equipment (see Figure 5 below).

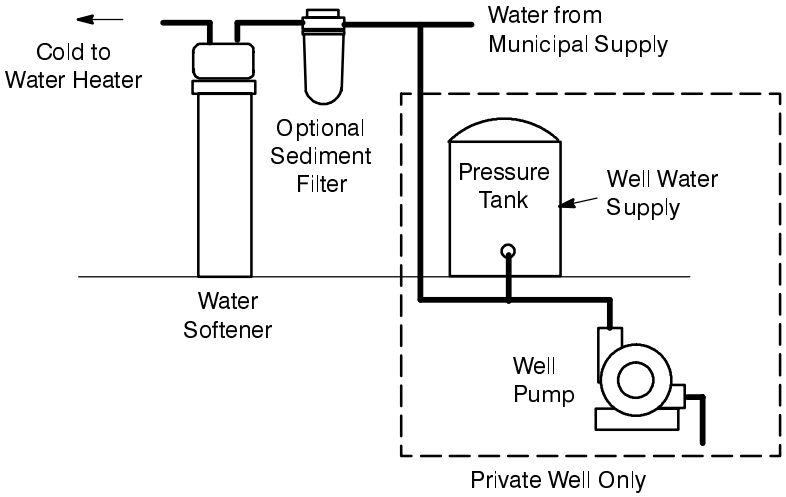

Figure 5

Optional Weather Protection

If installing the unit in an outside location, be sure to provide protection from the elements, contamination, vandalism, and direct sunlight.

An optional Weather Cover is available for outdoor installations by contacting your local dealer.

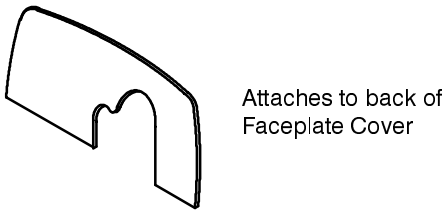

Figure 6

Installation

Step 1. Turn Off Water Supply

1. Close the main water supply valve, near the well pump or water meter.
2. Shut off the electric or fuel supply to the water heater.
3. Open all faucets to drain all water from the house pipes.

Step 2. Move the Unit into Place

Move the unit into installation position. Set it on a solid, smooth and level surface. If needed, place the unit on a section of plywood, a minimum of 3/4” thick. Then, shim under the plywood to level the unit, see Figure 7.

CAUTION: ***DO NOT PLACE SHIMS DIRECTLY UNDER THE SALT STORAGE TANK.*** **The weight of the tank, when full of water and salt, may cause the tank to fracture at the shim.**

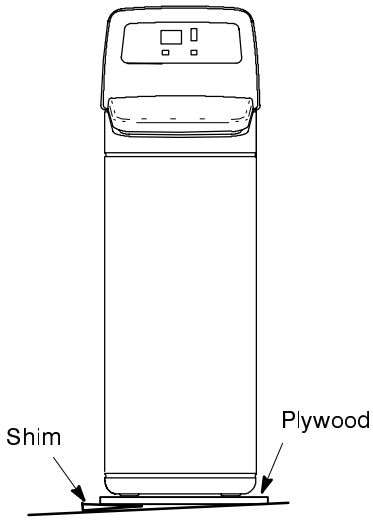

Figure 7

Visually check and remove any foreign materials from the valve inlet and outlet ports.

If not already done, put a light coating of silicone grease or Vaseline on the bypass valve o-rings.

Push the bypass valve into the softener valve as far as it will go. **Snap the 2 large holding clips into place, from the top down as shown in Figure 8.**

CAUTION: Be sure the clips snap firmly into place so the bypass valve will not pull out.

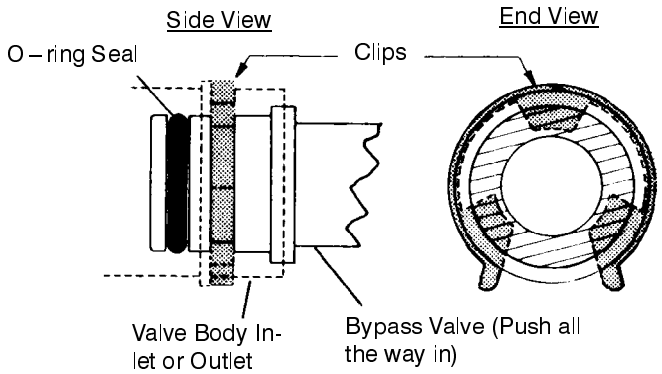

Figure 8

Step 3. Assemble Inlet and Outlet Plumbing

Measure, cut, and loosely assemble pipe and fittings from the main water pipe to the inlet and outlet ports of the valve.

Be sure **hard water** supply pipe **goes to** the valve **inlet side**.

NOTE: Inlet and outlet are marked on the valve. Trace the water flow direction to be sure.

CAUTION: Be sure to fit, align and support all plumbing to prevent putting stress on the softener valve inlet and outlet. Undo stress may cause damage to the valve.

Step 4. Connect Inlet and Outlet Plumbing

Complete the inlet and outlet plumbing as applicable, below.

1. SOLDERED COPPER
   a. Thoroughly clean and flux all joints.
   b. Make all solder connections. Be sure to keep fittings fully together, and pipes square and straight. **DO NOT solder with installation tubes attached to bypass valve.** Soldering heat will damage the valve.
2. THREADED PIPE
   a. Apply pipe joint compound to all outside pipe threads.
   b. Tighten all threaded joints.
   c. If soldering to the inlet and outlet tubes, observe step **1** above.
3. CPVC PLASTIC PIPE
   a. Clean, prime and cement all joints, following the manufacturer's instructions supplied with the plastic pipe and fittings.
   b. If soldering to the inlet and outlet tubes, observe Soldered Copper step **1** above.

Step 5. Cold Water Pipe Grounding

WARNING: The house cold water pipe (metal only) is often used as a ground for the house electrical system. The 3-valve bypass type of installation, shown in Figure. 2, will maintain ground continuity. If you use a plastic bypass valve at the unit, continuity is broken. To restore the ground, do the following.

Install a #4 copper wire across the removed section of main water pipe, securely clamping at both ends, see Figure 9 (parts not included).

NOTE: Check local plumbing and electrical codes for proper installation of the ground wire.

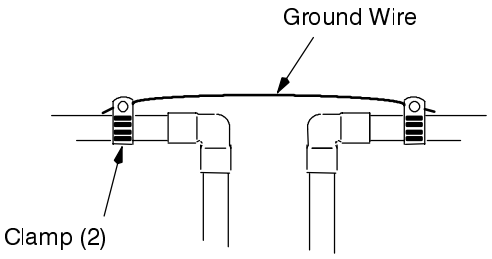

Figure 9

Step 6. Install Valve Drain Hose

NOTE: See valve drain options on page 11.

1. Connect a length of 3/8" or 7/16" I.D. hose (check codes) to the valve drain elbow, on the controller, see Figure 4. Use a hose clamp to hold the hose in place. Route the hose out through the notch in the Faceplate Cover.
2. Run the hose to the floor drain, and as typically shown in Figure 2, tie or wire the end to a brick or other heavy object. This will prevent "whipping" during regenerations. **Be sure to provide a 1-1/2" minimum air gap, to prevent possible sewer water backup.**

NOTE: In addition to a floor drain, you can use a laundry tub, or standpipe as a good drain point for this hose. Avoid long drain hose runs, or elevating the hose more than 8' above the floor.

Step 7. Install Salt Storage Tank Overflow Hose

1. Connect a length of 3/8" I. D. hose to the salt storage tank overflow elbow and secure in place with a hose clamp (see Figure 2).
2. Run the hose to the floor drain, or other suitable drain point **no higher than the drain fitting** on the salt storage tank. (This is a gravity drain.) If the tank overfills with water, the excess water flows to the drain point.

NOTE: Route the tubing neatly out of the way and cut it to the desired length.

DO NOT connect the valve drain tubing from step 6 to the salt storage tank over flow hose.

Step 8. Pressure Testing for Leaks

To prevent excessive air pressure in the unit and plumbing system, do the following steps EXACTLY in order.

1. Fully open two or more *softened* cold water faucets nearby the unit.
2. Place the bypass valve(s) in "bypass" position. See Figure 10.

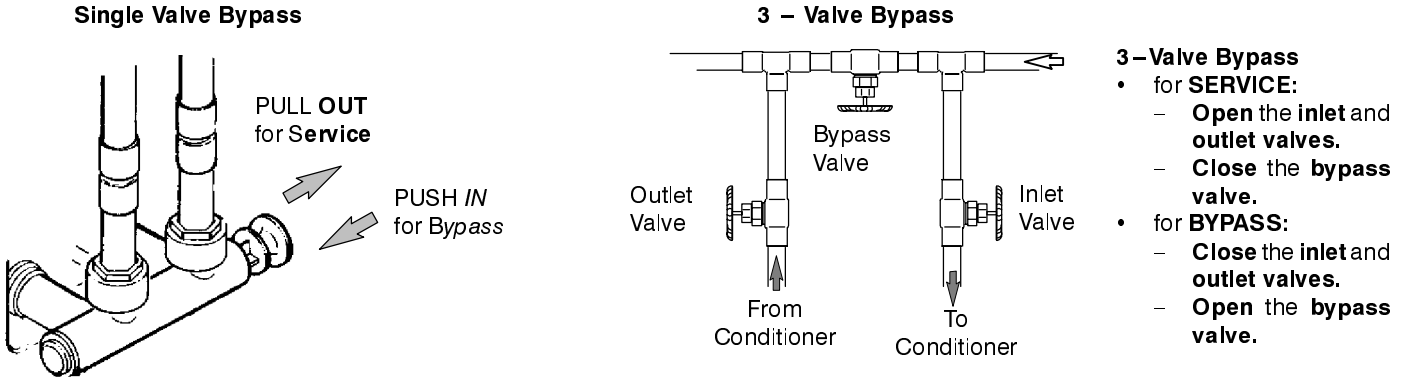

Figure 10

3. Fully open the main water supply valve. Observe steady flow from the opened faucets, with no air bubbles.
4. ***EXACTLY*** as follows, place bypass valve(s) in "service".
   a. SINGLE BYPASS VALVE: **SLOWLY,** move the valve stem toward "service", pausing several times to allow the unit to pressurize slowly.
   b. 3-VALVE BYPASS: Fully close the bypass valve and open the outlet valve. **SLOWLY,** open the inlet valve, pausing several times to allow the unit to pressurize slowly.
5. **After about three minutes, open a hot water faucet** for about one minute, or until all air is expelled, then close.
6. **Close all cold water faucets** and check your plumbing work for leaks.

Step 9. Add Water and Salt to the Salt Storage Tank

1. Using a container, add about one gallon of clean water into the salt storage tank.
2. Fill the salt storage tank with salt.

NOTE: See page 22 for additional information on salt.

Step 10. Sanitizing the Softener

Care is taken at the factory to keep your unit clean and sanitary. Materials used to make the unit will not infect or contaminate your water supply, and will not cause bacteria to form or grow. However, during shipping, storage, installing and operating, bacteria could get into the unit. For this reason, sanitizing as follows is suggested [1] when installing.

[1] Recommended by the Water Quality Association. On some water supplies, the unit may need periodic disinfecting.

1. Remove the Brinewell Cover and pour about 1-1/2 oz. (2 to 3 tablespoons) of common household bleach into the softener brinewell, Figure 1, page 9. Clorox, Linco, BoPeep, White Sail, Eagle, etc. are brand names of bleach readily available. **Replace the Brinewell Cover.**
2. The final step in the sanitizing procedure is done as you complete the following steps, including timer programming on page 18.
3. This process will flush out all sanitizing solution and condition the unit.

Step 11. Connect Transformer

1. Connect the power cable leads to the two terminals on the transformer.

NOTE: Check to be sure all leadwire connectors are secure on the back of the timer.

CAUTION: Be sure all wiring is away from the valve gear and motor area, which rotates during regenerations.

2. Plug the transformer into a continuously "live", grounded house electrical outlet, approved by local codes. ***THE UNIT WORKS ON 24V ONLY. DO NOT CONNECT WITHOUT THE TRANSFORMER.***

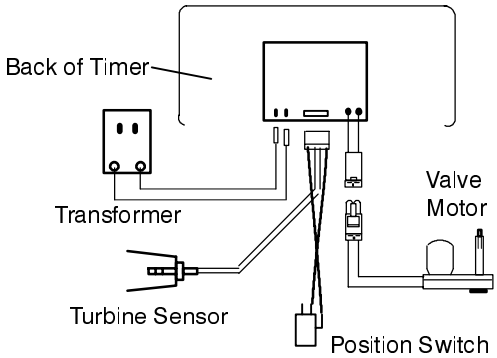

Figure 11

Step 12. Start a Recharge

Press the RECHARGE (**RECHARGE**) button and **hold** for three seconds until Recharge Now begins to flash in the timer display, starting a recharge. This recharge draws the sanitizing bleach into and through the unit. Any air remaining in the unit is purged to the drain.

Step 13. Restart the Water Heater

Turn on the electricity or fuel supply to the water heater, and light the pilot, if applicable.

NOTE: The water heater is filled with HARD water and, as hot water is used, it refills with conditioned water. In a few days, the hot water will be fully conditioned. To have fully conditioned hot water immediately, wait until the recharge (Step 12) is over. Then, drain the water heater until water runs cold.

Step 14. Install the Salt Hole and Faceplate Cover(s).

Complete the Programming Steps on Pages 18, 19 and 20.

Programming the Faceplate Timer

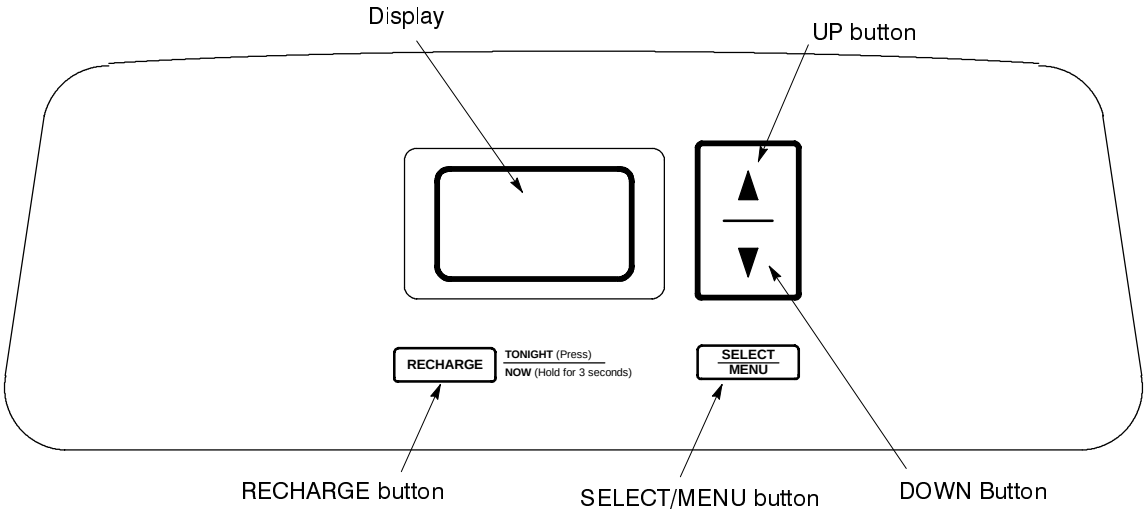

Figure 12

When the transformer is plugged into the electrical outlet, a model code and a test number (example: s3.0), begins to flash in the faceplate display. Then, *12:00 AM* and *PRESENT TIME* begins to flash.

NOTE: **If SR - - shows in the display, press the UP ▲ or DOWN ▼ button until SR24 shows. Then, press the SELECT/MENU [SELECT MENU] button to set, and change to the flashing *PRESENT TIME* display.**

Step 1. Set Time of Day

If the words *PRESENT TIME* do not show in the display, press the [SELECT MENU] **(Select/Menu)** button until they do.

1. Press the ▲ **(Up)** or ▼ **(Down)** buttons to set the present time. Up moves the display ahead; down moves the time backward.

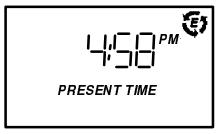

Be sure AM or PM, is correct.

NOTE: **Press buttons and quickly release to slowly advance the display. Hold for fast advance. *This procedure applies for all following settings.***

Step 2. Set Water Hardness Number

1. Press the SELECT MENU (**Select/Menu**) button once to display a flashing *25* and *HARDNESS*.

2. Press the ▲ (**Up**) or ▼ (**Down**) buttons to set your water hardness number.

NOTE: **Be sure to enter the grains per gallon (gpg) hardness of your water supply on page 4, for future reference. If your water supply contains iron, compensate for it by adding to the water hardness number.** ***For example, assume your water is 20 gpg hard and contains 2 ppm iron. Add 5 to the hardness number for each 1 ppm of iron. In this example, you would use 30 for your hardness number.***

	20 gpg hardness
2 ppm iron x 5 = 10	+10
(times)	30 HARDNESS NUMBER

Step 3. Set Recharge (Regeneration) Time

1. Press the SELECT MENU (**Select/Menu**) button once to display a flashing *2:00AM* and *RECHARGE TIME*.

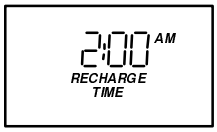

If no change is desired, go to **Step 4.** If you want to change the recharge start time, press the ▲ (**Up**) or ▼ (**Down**) buttons until the desired starting time shows.

Step 4. Set Salt Efficiency

When this feature is ON, the unit will operate at salt efficiencies of 4000 grains of hardness per pound of salt or higher. (May recharge more often using smaller salt dosage and less water).

1. Press **and hold** the SELECT/MENU **(Select/Menu)** button until the following screen is displayed.

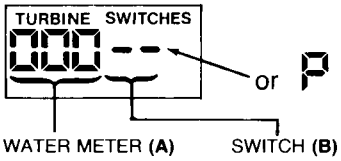

Once in this display, press the SELECT/MENU **(Select/Menu)** button and one of the following two displays is shown.

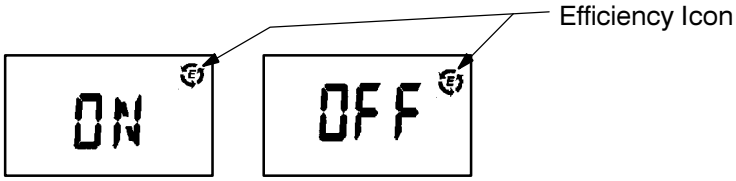

2. Press the ▲ **(Up)** or ▼ **(Down)** buttons to set On or Off. When set to On, the efficiency icon will be displayed in the upper right hand corner of the normal run display.
3. Press the SELECT/MENU **(Select/Menu)** button once again, to complete initial programming. *RECHARGE TONIGHT* will show in the display.

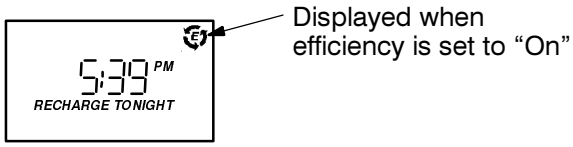

Your new water softener has been programmed for high salt efficiency when shipped from the factory. To achieve the maximum rated capacity of the water softener, the the efficiency setting needs to be in the off position. If you wish to turn the high efficiency feature off, follow the instructions on this page.

Customizing Features/Options

Recharge Now

If you have guests, or other times when more water than usual is used, you could begin to run out of conditioned water. If the unit is not scheduled to regenerate for another day or two, you could get hard water until then. If this occurs, do the following to start an immediate regeneration.

- Press and **hold** the RECHARGE **(Recharge)** button until **RECHARGE NOW** flashes in the display, and the softener enters the fill cycle of regeneration right away. **RECHARGE NOW** will flash during the regeneration. When over, full water conditioning capacity is restored.

RECHARGE NOW Initiated

NOTE: Avoid using hot water while the conditioner is regenerating, because the water heater will refill with bypass hard water.

Recharge Tonight

If you do not want to start an immediate recharge, but would like an extra recharge at the next preset recharge time, do the following to schedule a recharge.

- Press and **release** *(do not hold)* the RECHARGE **(Recharge)** button. **RECHARGE TONIGHT** flashes in the display, and the softener will recharge at the next recharge time. **RECHARGE NOW** will flash during the regeneration. When over, full water conditioning capacity is restored.

RECHARGE TONIGHT Initiated

Timer "Power–Outage Memory"

If electrical power to the timer is lost, "memory" built into the timer circuitry will keep *all* settings for several minutes. While the power is out, the display is blank and the unit will not regenerate. When electrical power is restored, the following will occur.

1. You have to reset the present time **only** if the display is flashing. The HARDNESS and RECHARGE TIME never require resetting unless a change is desired. Even if the timer is incorrect after a long power outage, the softener works as it should to keep your water soft. However, regenerations may occur at the wrong time of day until you reset the timer to the correct time of day.

NOTE: If the unit was regenerating when power was lost, it will now finish the cycle.

Routine Maintenance

Refilling With Salt

Remove the Salt Storage Tank Front Cover and check the salt storage level frequently. If the conditioner uses all the salt before you refill it, you will get hard water. Until you have established a refilling routine, check the salt every two or three weeks. ALWAYS refill if less than 1/3 full. **Be sure the Brinewell Cover is on.**

NOTE: In humid areas, it is best to keep the salt storage level lower, and to refill more often.

RECOMMENDED SALT: Cube, pellet, coarse solar, etc., water conditioner salt is recommended. This type of salt is from high purity evaporated crystals, sometimes formed, or compressed, into briquets. It has less than 1% insoluble (will not dissolve in water) impurities.

SALT NOT RECOMMENDED: Rock salt, high in impurities, block, granulated, table, ice melting, ice cream making salts, etc., are not recommended.

SALT WITH IRON REMOVING ADDITIVES: Some salts have an additive to help a water conditioner handle iron in a water supply.

Breaking A Salt Bridge

Sometimes, a hard crust or salt bridge forms in the brine tank. It is usually caused by high humidity or the wrong kind of salt. When the salt bridges, an empty space forms between the water and the salt. Then, salt will not dissolve in the water to make brine. Without brine, the resin bed does not regenerate and you will have hard water.

If the storage tank is full of salt, it is hard to tell if you have a salt bridge. Salt is loose on top, but the bridge is under it. Take a broom handle, or like tool, and push it straight down into the salt. If a hard object is felt, it's most likely a salt bridge. *Carefully* push into the bridge in several places to break it. **DO NOT use any sharp or pointed objects as you may puncture the tank.**

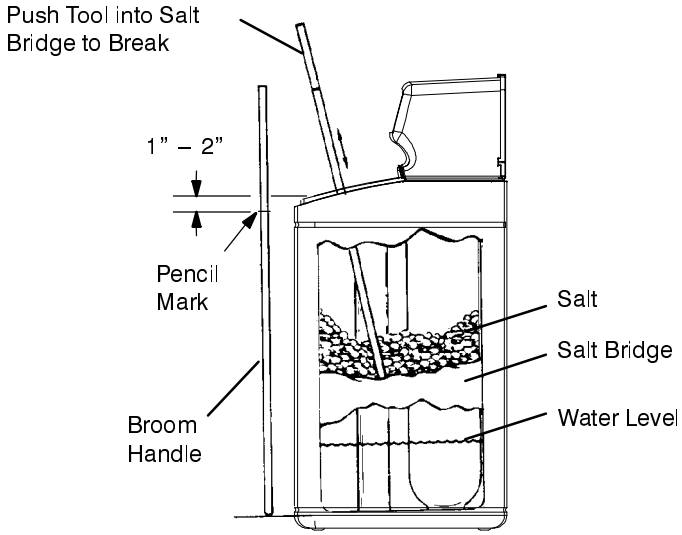

Figure 13

Cleaning the Nozzle and Venturi

A clean nozzle and venturi (see Figure 14) is a must for the conditioner to work properly. This small unit creates the suction to move brine from the brine tank, into the resin tank. If it should become plugged with sand, silt, dirt, etc., the conditioner will not work, and you will get hard water.

To get to the nozzle and venturi, slide Faceplate Cover forward. **Be sure the unit is in soft water cycle** (no water pressure at nozzle and venturi). Then, holding the nozzle and venturi housing with one hand, turn off the cap. *Do not lose the o-ring seal.* Lift out the screen support and screen. Then, remove the nozzle and venturi. Wash the parts in warm, soapy water and rinse in fresh water. If needed, use a small brush to remove iron or dirt. Be careful not to scratch, misshape, etc., surfaces of the nozzle and venturi. Also, check and clean the gasket and flow plug(s).

Carefully replace all parts in the correct order. Lubricate the o-ring seal with silicone grease and locate in position. Install and tighten the cap, **by hand only. Do not overtighten** and break the cap or housing.

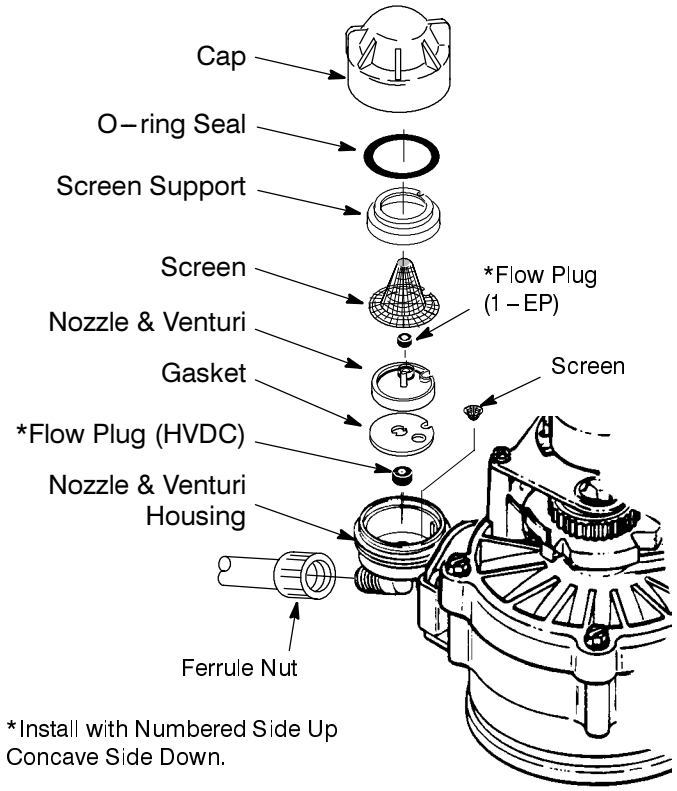

IMPORTANT: Be sure small hole in the gasket is **centered directly over** the small hole in the nozzle & venturi housing.

Figure 14

Troubleshooting Guide

Tools Needed For Most Repairs: 5/16 Hex Driver, Phillips Screwdriver, Needle–nose Pliers			
PROBLEM	**CAUSE**	**SOLUTION**	**REPAIR KIT(S) NEEDED**
No Soft Water	1. No salt in the storage tank	a. Refill with Morton System Saver Pellets (see page 22) b. Use Recharge Now feature (page 21)	None
No Soft Water Timer Display Blank	1. Transformer unplugged at wall outlet, or power cable disconnected, Transformer OR POWER CORD defective	a. Check for loss of power and correct. Reset timer and use the Recharge Now feature (page 21)	Transformer Power Cord
	2. Fuse blown, circuit breaker popped, or circuit switched off. (See page 21 "Timer Power Outage Memory").	a. Replace fuse, reset circuit breaker, or switch circuit on use the Recharge Now feature (page 21).	None
	3. Timer control board defective	a. Replace Electronic Control Board (page 28)	Timer Control Board
No Soft Water Salt Level Not Dropping	1. Salt in storage tank bridged	a. Refer to page 22 to break.	None
	2. Manual bypass valve(s) in bypass position	a. See page 16 figure 10. Move stem in single bypass to service	None
No Soft Water, Salt Storage Tank Full Of Water, Water Running To The Drain (While Unit Is In The Soft Water Cycle	1. Dirty, plugged or damaged nozzle & venturi	a. Take apart, clean and inspect nozzle and venturi (see page 23)	Nozzle Kit
	2. Inner valve defect causing leak	a. Replace seals and rotor (page 28)	Rotor/Seal Kit
	3. Valve drain hose plugged	a. Hose must not have any kinks, sharp bends or any water flow blockage (see page 10)	None
	4. Low or high system water pressure (low pressure may disrupt brine draw during recharge, high pressures may cause inner valve parts failure)	a. If pressure is low, increase well pump output to a minimum 20 psi. Add a pressure reducing valve in the supply pipe to the softener, if daytime pressure is over 100 psi.	None
	5. Brine valve float kit dirty or defective	a. Clean Brine or replace valve float kit assembly (page 28)	Float Kit
	6. Leak between valve and resin tank assembly	a. Replace Tank/Valve O–Rings	Tank/Valve O–ring Kit
Water Hard Sometimes	1. Time setting wrong	a. Check and change time setting	None
	2. Incorrect water hardness setting	a. Refer to page 19 to find correct settings	None
	3. Incorrect model code programmed	a. Refer to page 18 to find correct settings	None
	4. Hot water being used when softener is regenerating	a. Avoid using hot water while the softener is regenerating as the water heater will fill with hard water. Check timer for correct settings	None
	5. Possible increase in water hardness	a. Test the raw water for hardness and iron and program the timer accordingly (page 19).	None
	6. Leaking faucet or toilet valve. Excessive water usage.	a. A small leak will waste hundreds of gallons of water in a few days. Fix all leaks and always fully close faucets.	None
Iron In Water	1. Clear water iron in water supply 2. Iron in soft water 3. Bacterial or organic bound iron	a. Test the raw water for hardness and iron and program the timer accordingly (page 19). b. Clean resin bed with Resin Bed Cleaner c. Cannot be treated by water softener	None
Resin In Household Plumbing, Resin Tank Leaking	1. Crack in distributor or riser tube	a. Replace resin tank assembly (page 28)	Resin Tank Assembly
Salt Storage Tank Leaking	1. Crack in brine tank	a. Replace salt storage tank assembly (page 28)	Salt Storage Tank Assembly
Motor Stalled Or Clicking	1. Motor defective or inner valve defect causing high torque on motor	a. Replace Rotor/Seal kit (page 28) b. Replace Motor & Switch	Rotor/ Seal Kit Motor/Switch Kit
Error Code E1, E2, E3, or E4 appears	1. Wiring Harness or Connection to Position Switch 2. Switch 3. Valve Defect Causing High Torque 4. Motor Inoperative	a. Replace Wiring Harness or Connection to Position Switch b. Replace Switch c. Replace Rotor Seal Kit d. Replace Motor	Motor/Switch Kit Rotor/ Seal Kit
Error Code E5 appears	1. Faceplate	a. Replace Electronic Control Board	Electronic Control Board Kit

PROCEDURE FOR REMOVING ERROR CODE FROM FACEPLATE: 1. Unplug transformer– – – – 2. Correct defect– – – – 3. Plug in transformer– – – – 4. Wait for 6 minutes. The error code will return if the defect was not corrected.

Automatic Electronic Diagnostics

The faceplate has a self-diagnostic function for the electrical system (except input power and/or water meter). The faceplate monitors electronic components and circuits for correct operation. If a malfunction occurs, an error code appears in the faceplate display.

The troubleshooting chart on page 24 shows the error codes that could appear, and the possible defects for each code.

While an error code appears in the display, all faceplate buttons are inoperable except the SELECT/MENU button. SELECT/MENU remains operational so the service person can perform the *Manual Advance Diagnostics,* see below, to further isolate the defect.

Manual Advance Diagnostics

Use the following procedures to advance the unit through the regeneration cycles to check operation.

Remove the Faceplate Cover to observe cam and switch operation during valve rotation.

1. Press and **hold** [SELECT MENU] (**Select/Menu**) for 3 seconds until 000 - - shows in the display.

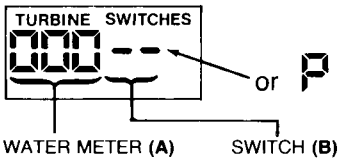

2. The first 3 digits indicate water meter operation as follows:

   000 (steady) = Soft water not in use, and no flow through the meter.

   —OPEN A NEARBY SOFT WATER FAUCET —

   000 to 199 (continual) = Repeats display for each gallon of water passing through the meter.

NOTE: **If you don't get a reading in the display, with faucet open, pull the sensor from the valve outlet port. Pass a small magnet back and forth in front of the sensor. You should get a reading in the display. If you get a reading, unhook the in and out plumbing and check the turbine for binding.**

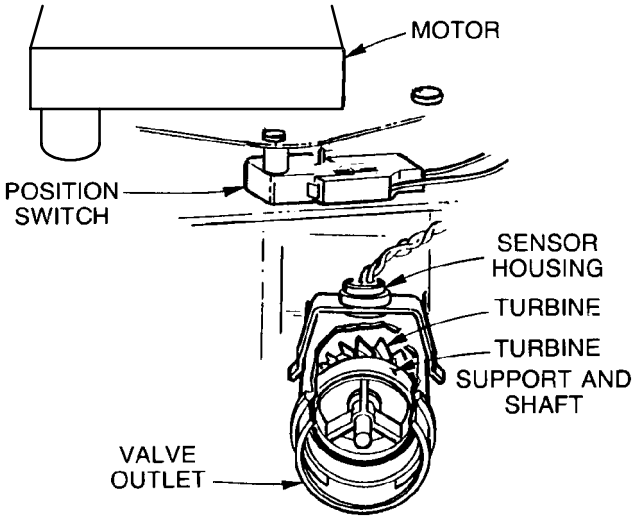

3. The letter (P) and dash (or dashes) indicate POSITION switch operation. If the letter appears, the switch is closed. If the dash shows, the switch is open.
4. Use the RECHARGE **(Recharge)** button to manually advance the valve into each cycle and check correct switch operation.

NOTE: Be sure water is in contact with the salt, and not separated by a salt bridge... see page 22.

5. While in this diagnostic screen, the following information is available and may be beneficial for various reasons. This information is retained by the computer from the first time electrical power is applied to the face plate.
   a. Press ▲ **(Up)** to display the number of days this face plate has had electrical power applied.
   b. Press ▼ **(Down)** to display the number of regenerations initiated by this face plate since the SR code number was entered.
6. Press and hold the SELECT MENU **(Select/Menu)** button until SR24 shows in the display.

   This code identifies the softener model. If the wrong number shows, the softener will operate on incorrect programming.
7. Return the present time display — Press the SELECT MENU **(Select/Menu)** button.
8. To change SR number — Press the ▲ **(Up)** or ▼ **(Down)** button until the correct SR code shows. Then, press the SELECT MENU **(Select/Menu)** button to return to the present time display.

Manual Advance Regeneration Check

This check verifies proper operation of the valve motor, brine tank fill, brine draw, regeneration flow rates, and other controller functions. **Always make the initial checks, and the manual initiated diagnostics.**

NOTE: The faceplate display must show a steady time (not flashing). If an error code shows, first press the SELECT MENU (Select/Menu) button to enter the diagnostic display.

1. Press the RECHARGE **(Recharge)** button and hold in for 3 seconds. *RECHARGE* begins to flash as the softener enters the fill cycle of regeneration. Remove the brinewell cover and, using a flashlight, observe fill water entering the tank.
   a. If water **does not** enter the tank, look for an obstructed nozzle, venturi, fill flow plug, brine tubing, or brine valve riser pipe.
2. After observing fill, press the RECHARGE **(Recharge)** button to move the softener into brining. A slow flow of water to the drain will begin. Verify brine draw from the brine tank by shining a flashlight into the brinewell and observing a noticeable drop in the liquid level.

NOTE: Be sure a salt bridge is not preventing water with salt contact.

a. If the unit does not draw brine, check for (most likely to least likely)
   - Dirty or defective nozzle and venturi, page 23
   - Nozzle and venturi not seated on the gasket, or gasket defective
   - Restriction in valve drain, causing a back-pressure (bends, kinks, elevated too high, etc.), installation Step 6 on page 15
   - Obstruction in brine valve or brine tubing
   - Inner valve failure (obstructed outlet disc, wave washer defective, etc.)

NOTE: **If water system pressure is low, an elevated drain hose may cause back pressure, stopping brine draw.**

3. Again, press the RECHARGE **(Recharge)** button to move the softener into backwash. Look for a fast flow of water from the drain hose.
   a. An obstructed flow indicates a plugged top distributor, backwash flow plug, or drain hose.
4. Press the RECHARGE **(Recharge)** button to move the softener into fast rinse. Again look for a fast drain flow. Allow the softener to rinse for a few minutes to flush out any brine that may remain in the resin tank from the brining cycle test.
5. To return the softener to service, press the RECHARGE **(Recharge)** button.

RBS—24ED

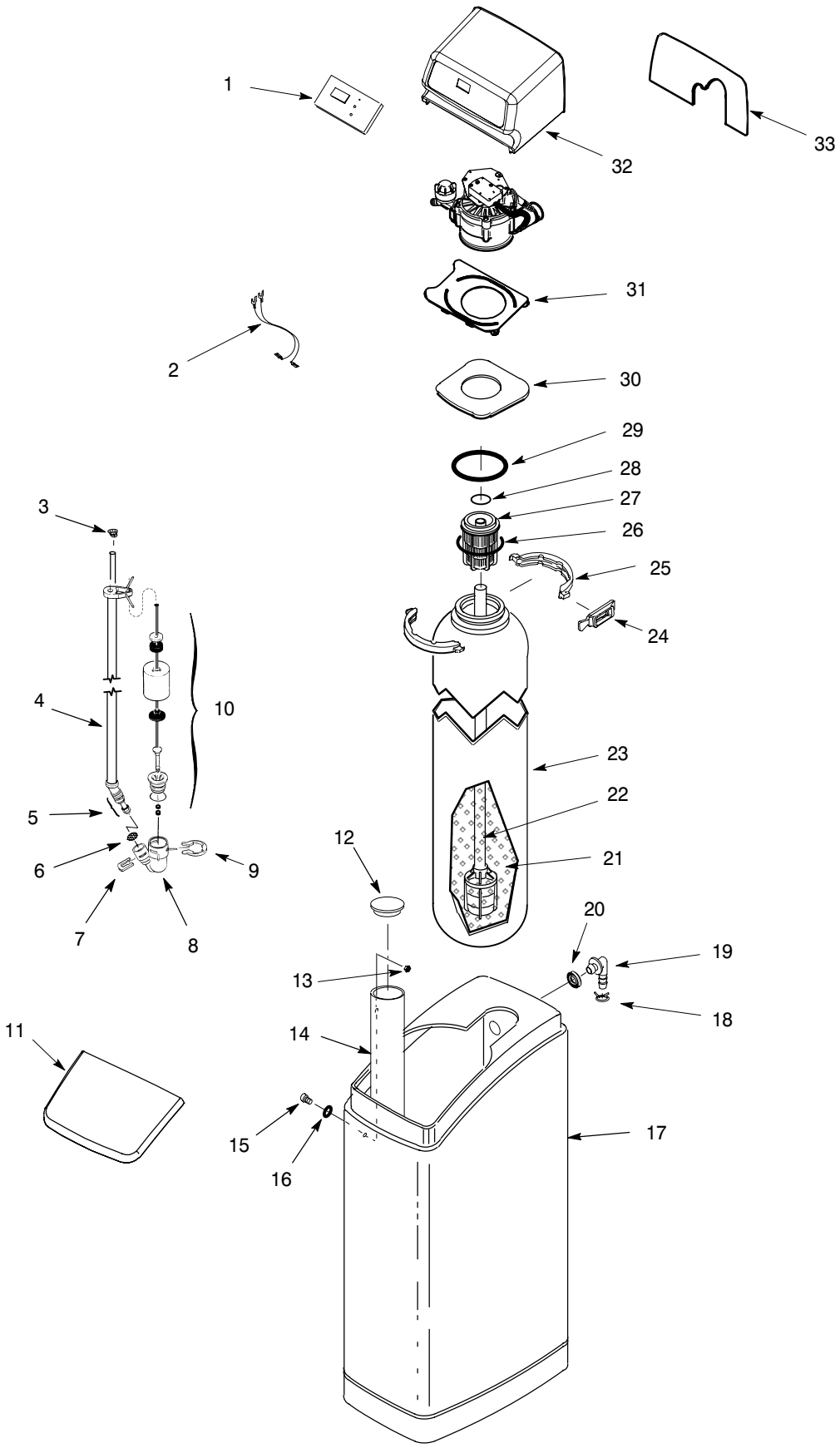
1
32
33
31
2
30
29
28
27
26
25
24
3
4
10
23
22
5
12
21
6
9
7
8
20
19
13
18
11
14
15
17
16

RBS–24ED

KEY-NO.	PART NO.	DESCRIPTION
1	7249079	Rep'l PWA
2	7250826	Power Cord
3	7221746	Screen
4	7221746	Brine Tube
5	7113016	Tubing Assembly
6	7131365	Screen
7	7080653	Clip
8	7092252	Brine Valve Body
9	1205500	Clip
10	7221754	Float, Stem & Guide Assembly
11	7250884	Salt Hole Cover
12	7155115	Brinewell Cover
13	7082150	Wing Nut, 1/4 – 20
14	7100819	Brinewell
15	7148875	Screw, 1/4 – 20 Nylon
16	7003847	O–ring
17	7238531	Repl. Brine Tank
18	0900431	Hose Clamp

KEY NO.	PART NO.	DESCRIPTION
19	1103200	Hose Adaptor
20	9003500	Grommet
21	0501741	Resin, 26–1/2 lbs (1/2 cu ft)
	0502272	Resin, 53 lbs (1 cu ft)
22	7105047	Repl. Bottom Distributor
23	7113058	Resin Tank, 8 in. dia x 40 in.
24	7088033	Clamp Retainer (2)
25	7176292	Clamp Section (2)
26	7170270	O–ring Seal, 2–3/4 in. x 3 in.
27	7077870	Top Distributor
28	7170254	O–ring Seal, 13/16 in. x 1–1/16 in.
29	7170296	O–ring Seal, 2–7/8 in. x 3–1/4 in.
30	7237381	Vapor Barrier
31	7225499	Locking Plate
32	7223528	Faceplate Cover (order decal below)
	7251848	Decal (for above cover)
33	7235460	Weather Cover

RBS—24ED

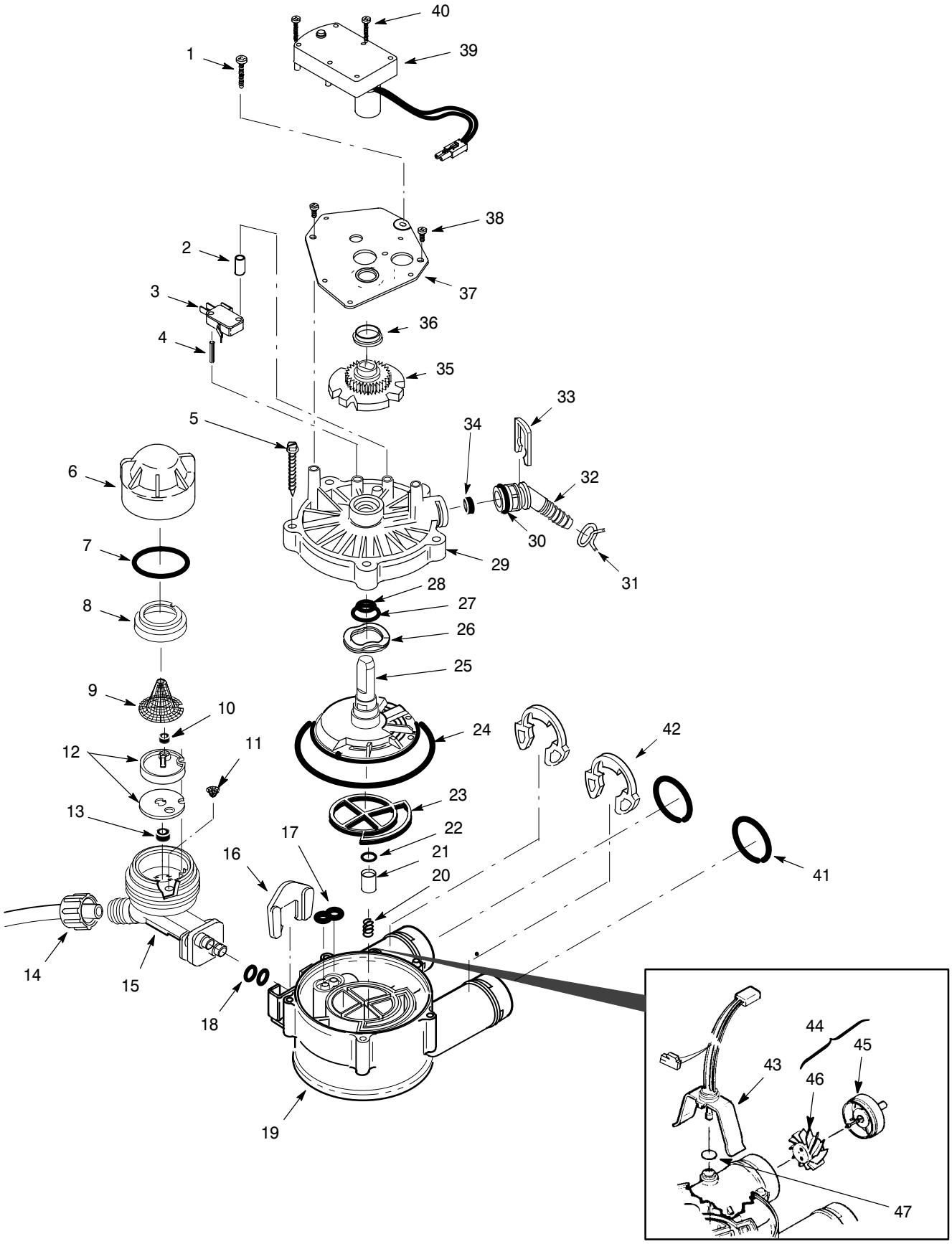
40
39
1
38
2
37
3
36
4
35
33
5
34
6
32
30
7
29
31
28
8
27
26
25
9
10
24
42
12
11
23
13
22
17
21
16
41
20
14
15
18
19
44
45
43
46
47

RBS–24ED

KEY NO.	PART NO.	DESCRIPTION
1	7070412	Screw, #4 – 24 x 1–1/8 in.
2	7117816	Spacer
3	7030713	Switch
4	7077472	Expansion Pin
5	7074123	Screw, #10 14 x 2 in. (5)
6	7199729	Cap
7	7170262	O–ring Seal, 1.1 in. x 1.4 in.
8	7167659	Screen Support
9	7146043	Screen
10	0521829	Flow Plug, .1gpm
11	7095030	Cone – Screen
12	7248007	Nozzle & Venturi, with Gasket Kit
–	7190547	Gasket (only)
13	1148800	Fill Flow Plug, .3 gpm
14	1202600	Nut–Ferrule
15	7081104	Nozzle & Venturi Housing
16	7081201	Retainer
17	7081764	Seal (Nozzle & Venturi)
18	7170319	O–ring Seal, 1/4 in. x 3/8 in. (2)
19	7082053	Valve Body
20	7129889	Spring
21	7092642	Plug (Drain Seal)
22	7170204	O–ring Seal, 3/8 in. x 9/16 in.
23	7134224	Rotor Seal / Wear Strip
24	7170246	O–ring Seal, 3–3/8 in. x 3–5/8 in.
25	7199232	Rotor & Disc
26	7082087	Wave Washer
27	7170212	O–ring Seal, 3/4 in. x 15/16 in.
28	7170238	O–ring Seal, 7/16 in. x 5/8 in.
29	7085263	Valve Cover

KEY NO.	PART NO.	DESCRIPTION
30	7170327	O–ring Seal, 5/8 in. x 13/16 in.
31	0900431	Hose Clamp
32	7024160	Drain Hose Adaptor
33	7142942	Clip
34	0501228	Flow Plug, Backwash / F. Rinse control
35	7113927	Cam and Gear
36	0503288	Bearing
37	7231385	Motor Plate
38	0900857	Screw, #6 – 20 x 3/8 in. (2)
39	7228544	Motor – Includes Key No. 40
40	7224087	Screw, #6 – 20 x 7/8 in. (2)
41	7133498	O–ring (2)
42	7116713	Clip (2)
43	7246568	Sensor Housing/Wiring Harness Asm
44	7113040	Turbine and Support Assembly
45	––	Turbine Support
46	––	Turbine
47	0900060	O–ring Seal